Solar systems by Schweizer:
Data sheet – MSP-PR
PV mounting system for pitched roof MSP-PR

Ernst Schweizer AG
Bahnhofplatz 11
8908 Hedingen, Switzerland

Phone +41 44 763 61 11
www.ernstschweizer.ch
solar@ernstschweizer.ch

© Ernst Schweizer AG

Contents

1 Basic dimensions and component materials ... 3
2 Design resistance of components (ultimate limit state) ... 7
2.1 Spacer plate MSP-PR-SP, base plate MSP-PR-BP and wood screw MSP-PR-HS ... 8
2.2 Roof hooks MSP-PR-RHF/RHA/RHC/RHL ... 9
2.3 Roof hooks MSP-RHC ... 10
2.4 Support profile MSP-PR-CH ... 10
2.4.1 Cross-section values ... 11
2.4.2 Surface resistance values ... 12
2.5 Cross-connector MSP-PR-CC ... 13
2.6 Middle / end clamp MSP-PR-MC/EC ... 13
2.7 Hanger bolts Adapter plate MSP-PR-HBP (without hanger bolt) ... 15
3 Deflection of the roof hook MSP-RHF/RHA/RHC/RHL (limit state of serviceability) ... 15

© Ernst Schweizer AG

Ernst Schweizer AG
Bahnhofplatz 11
8908 Hedingen, Switzerland

Phone +41 44 763 61 11
www.ernstschweizer.ch
solar@ernstschweizer.ch

1 Basic dimensions and component materials

Product designation	Material designation	Dimensions (rounded up to full mm)
Spacer plate MSP-PR-SP 10mm	PA66 GF30	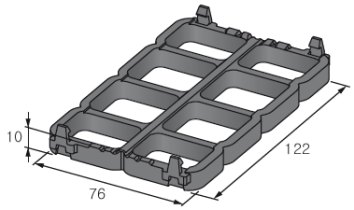
Basic plate MSP-PR-BP 39mm MSP-PR-BP 45mm	EN AW-6063 T66 – EN 755-2	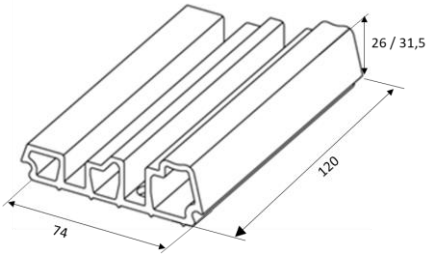
Wood screw DxL MSP-PR-HS 8x100mm A2 MSP-PR-HS 8x120mm A2	Stainless steel A2	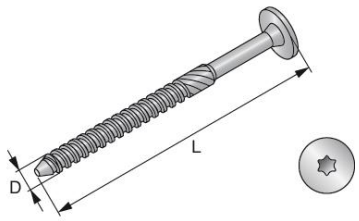
Roof hooks MSP-PR-RHF	Clamp with screw and nut (1) EN AW-6060 T66 - EN 755-2 All other aluminium componentsEN AW-6063 T66 - EN 755-2 Screws A2-70 - ISO 3506-1 Nuts A4-70 - ISO 3506-2	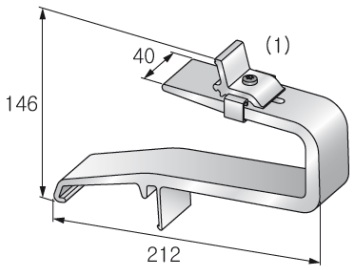
Roof hooks MSP-PR-RHA	Clamp with screw and nut (1) EN AW-6060 T66 - EN 755-2 All other aluminium components EN AW-6063 T66 - EN 755-2 Screws A2-70 - ISO 3506-1 Nuts A4-70 - ISO 3506-2	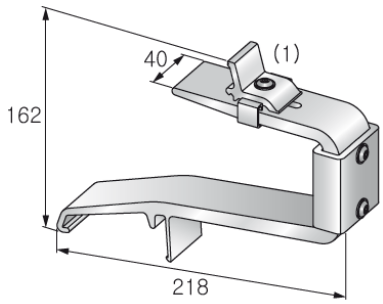

© Ernst Schweizer AG

Ernst Schweizer AG
Bahnhofplatz 11
8908 Hedingen, Switzerland

Phone +41 44 763 61 11
www.ernstschweizer.ch
solar@ernstschweizer.ch

Solar systems by Schweizer:
Data sheet – mounting system for pitched roof MSP-PR

Product designation	Material designation	Dimensions (rounded up to full mm)
Roof hooks MSP-PR-RHC	Clamp with screw and nut (1) EN AW-6060 T66 - EN 755-2 All other aluminium components EN AW-6063 T66 - EN 755-2 Screws A2-70 - ISO 3506-1 Nuts A4-70 - ISO 3506-2	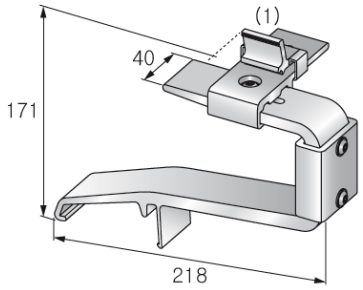
Roof hooks MSP-PR-RHL	Clamp with screw and nut (1) EN AW-6060 T66 - EN 755-2 All other aluminium components EN AW-6063 T66 - EN 755-2 Screws A2-70 - ISO 3506-1 Nuts A4-70 - ISO 3506-2	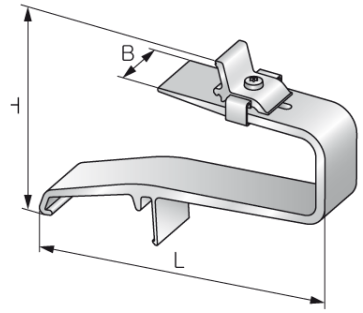
Support profile MSP-PR-CH 6.3m MSP-PR-CH 6m MSP-PR-CH 3.3m	EN AW-6063 T66 - EN 755-2	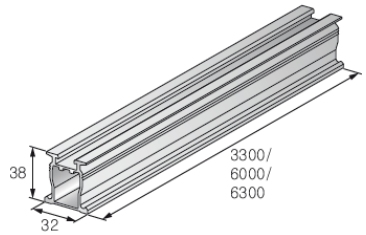
Rail connector MSP-PR-SL	Rail EN AW-6063 T66 - EN 755-2 Spring X2CrNiMo17-12-2 (1.4404) - EN 10088-2	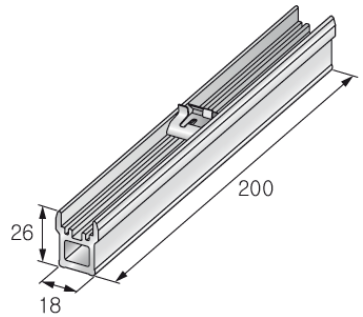
Cross-connector MSP-PR-CC	Mounting bracket EN AW-6063 T66 - EN 755-2 Screws A2-70 - ISO 3506-1	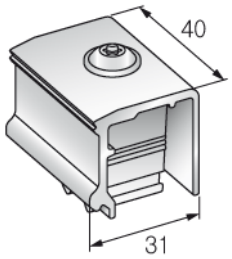

© Ernst Schweizer AG

Ernst Schweizer AG
Bahnhofplatz 11
8908 Hedingen, Switzerland

Phone +41 44 763 61 11
www.ernstschweizer.ch
solar@ernstschweizer.ch

Solar systems by Schweizer:
Data sheet – mounting system for pitched roof MSP-PR

Product designation	Material designation	Dimensions (rounded up to full mm)
Middle clamp MSP-PR-MC 28-45mm MSP-PR-MCB 28-45mm	Mounting bracket EN AW-6063 T66 - EN 755-2 Screws A2-70 - ISO 3506-1 Washer PVC	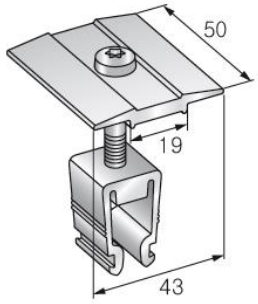
Middle terminal conductive MSP-PR-MC/G 28-45mm MSP-PR-MCB/G 28-45mm	Mounting bracket EN AW-6063 T66 - EN 755-2 Screws A2-70 - ISO 3506-1 Washer PVC Earthing bridge SUS316/SUS316L	
End clamp MSP-PR-EC 28-45mm MSP-PR-ECB 28-45mm	Mounting bracket EN AW-6063 T66 - EN 755-2 Screws A2-70 - ISO 3506-1 Washer PVC Nut A4-70 - ISO 3506-2	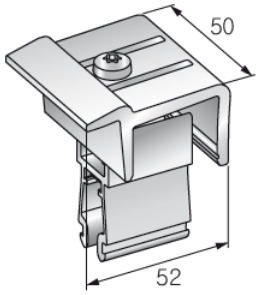
Adapter plate MSP-PR-HBP	EN AW-6063 T66 – EN 755-2	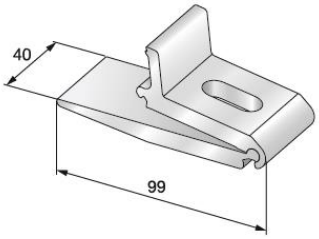
Rail end cap MSP-PR-CAP	PA66 GF30	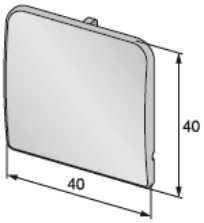

© Ernst Schweizer AG

Ernst Schweizer AG
Bahnhofplatz 11
8908 Hedingen, Switzerland

Phone +41 44 763 61 11
www.ernstschweizer.ch
solar@ernstschweizer.ch

Product designation	Material designation	Dimensions (rounded up to full mm)
Roof hooks stainless steel MSP-RHC 45/5	Plate and hooks: X5CrNi18-10, X2CrNi19-11, X2CrNi18-9 Clamp: EN AW-6063 T66 Spring: X12CrNi17-7, X10CrNi18-8 Truss-head screw: stainless A2-70 Hexagonal nut: stainless A4-70	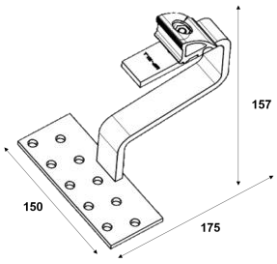
Roof hooks stainless steel MSP-RHC 55/5	Plate and hooks: X5CrNi18-10, X2CrNi19-11, X2CrNi18-9 Clamp: EN AW-6063 T66 Spring: X12CrNi17-7, X10CrNi18-8 Truss-head screw: stainless A2-70 Hexagonal nut: stainless A4-70	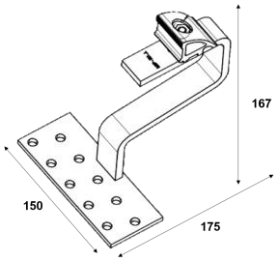
Roof hooks stainless steel MSP-RHC 41/8	Plate and hooks: X5CrNi18-10, X2CrNi19-11, X2CrNi18-9 Clamp: EN AW-6063 T66 Spring: X12CrNi17-7, X10CrNi18-8 Truss-head screw: stainless A2-70 Hexagonal nut: stainless A4-70	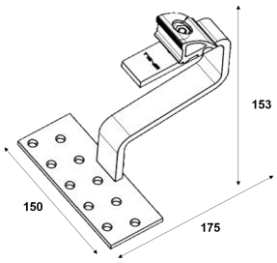
Roof hooks stainless steel MSP-RHC 55/8	Plate and hooks: X5CrNi18-10, X2CrNi19-11, X2CrNi18-9 Clamp: EN AW-6063 T66 Spring: X12CrNi17-7, X10CrNi18-8 Truss-head screw: stainless A2-70 Hexagonal nut: stainless A4-70	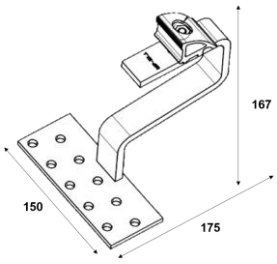

© Ernst Schweizer AG

Ernst Schweizer AG
Bahnhofplatz 11
8908 Hedingen, Switzerland

Phone +41 44 763 61 11
www.ernstschweizer.ch
solar@ernstschweizer.ch

2 Design resistance of components (ultimate limit state)

In order to verify the resistance values of pitched roof systems of the MSP-PR type, the values of each component must be taken into account individually:

– Load values of the roof structure according to the relevant building regulations	– By the customer
– Spacer plate MSP-PR-SP, base plate MSP-PR-BP and wood screw MSP-PR-HS, see 2.1 – Roof hooks MSP-PR-RHF/RHA/RHC/RHL, see 2.2 – Roof hooks MSP-RHC, see 2.3 – Support profile MSP-PR-CH, siehe 2.4 – Cross connector MSP-PR-CC, siehe 2.5 – Middle / end clamp MSP-PR-MC/MCB/EC/ECB, see 2.6 – Hanger bolts and adapter plate, see 2.8	– According to this data sheet

The component with the lowest resistance values is decisive for the capability of the application.

All resistance values are calculated in accordance with the following regulations and standards:
- DIN EN 1990:2010-12 (EC 0)
- DIN EN 1999-1-1:2010-05 (EC 9)
- VDI 2230 Blatt 1:2003-02 (VDI 2230)
- DIN EN 01/01/1995:2012-12 (EC 5)
- ETA-12/0483

The resistance values are only valid if the complete Schweizer MSP-PR system by Schweizer is used and the installation is carried out in accordance with the installation manual for the PV mounting system for pitched roof MSP-PR.

© Ernst Schweizer AG

Ernst Schweizer AG
Bahnhofplatz 11
8908 Hedingen, Switzerland
Phone +41 44 763 61 11
www.ernstschweizer.ch
solar@ernstschweizer.ch

2.1 Spacer plate MSP-PR-SP, base plate MSP-PR-BP and wood screw MSP-PR-HS

The Design resistance values in Table 1 apply to roof hooks type MSP-PR-RHF/RHA/ RHC/RHL fixed in conjunction with all versions of spacer plate MSP-PR-SP, base plate MSP-PRBP and wood screw MSP-HS (see chapter 1).
All resistance values listed here are composed of the individual resistances of the components and are transferred to the connection between roof hook MSP-PR-RHF/RHA/RHC/RHL and support profile MSP-PR-CH. The corresponding resistance vectors may be found in Fig. 1. The calculation of the resistance values assumes a fixed connection between the roof hook MSP-PR-RHF/RHA/ RHC/RHL and the support profile MSP-PR-CS.
In Table 1 the resistance values under the action of suction, compressive and shear forces are listed with the resulting angles of action β between 0 and 90°. Intermediate values for the resistances can be calculated by linear interpolation.

The structural timber used must comply with EN 338:2009-10 or DIN EN 14081 -1:2011 -05 and have a strength class of C24 to C40 and a density ρ of at least 350 kg/m^3. For mean creep strength and service class 2, the displacement factor k_{mod} 0.8 is applied.

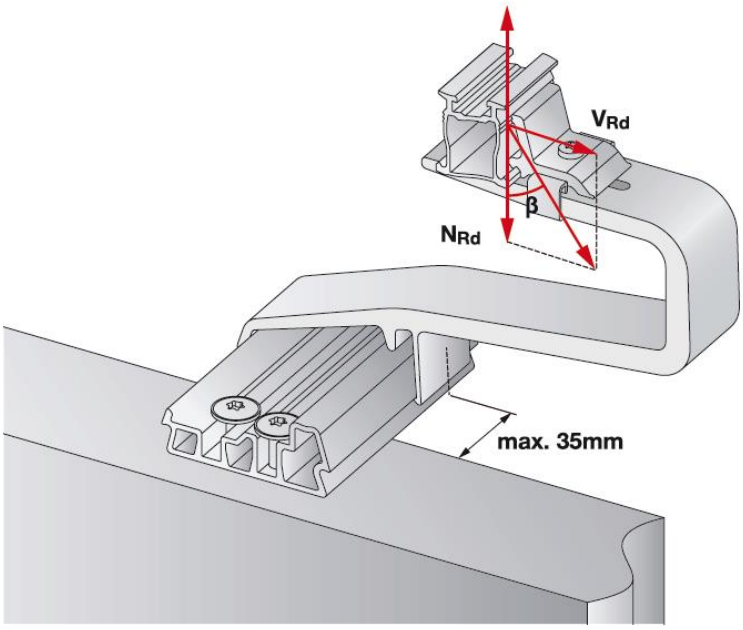

Fig. 1: Resistance vectors of roof hook and roof hook assembly group

Table 1
Design resistance for MSP-PR-SP, MSP-PR-BP and MSP-HS

Design resistance Suction [N_{Rd} in kN]	-1.66
Design resistance Pressure [N_{Rd} in kN]	2.43
Design resistance Shear force [V_{Rd} in kN]	1.73

© Ernst Schweizer AG

Ernst Schweizer AG
Bahnhofplatz 11
8908 Hedingen, Switzerland
Phone +41 44 763 61 11
www.ernstschweizer.ch
solar@ernstschweizer.ch

2.2 Roof hooks MSP-PR-RHF/RHA/RHC/RHL

In Table 2 and Table 3 is the design resistances of the roof hooks MSP-PR-RHF/RHA/RHC/RHL under the action of compressive and shear tensile forces with the resulting angles of action β between 0 and 90°. Intermediate resistance values can be calculated by linear interpolation. In Table 4 and Table 5 are list the resistance values for pure tensile load. The calculation of the resistance values assumes a fixed connection between the roof hook MSP-PR-RHF/RHA/RHC and the support profile MSP-PR-CS. For the calculation of the design resistance, a plasticity of 1.47 is assumed.

For the calculation of the design resistance under changing load directions such as compression and traction, the following equations must be fulfilled:

1. $P_{Ed} \leq N_{Rd}$ (pressure)
2. $|S_{Ed}| \leq |N_{Rd}$ (suction)$|$
3. $|S_{Ed}| + P_{Ed} \leq 1.47\ |N_{Rd}$ (suction)$| + N_{Rd}$ (pressure)

P_{Ed} represents the compressive forces and S_{Ed} the tensile forces of predominant load constellations.

Table 2
Design resistance for MSP-PR-RHF

Design resistance Suction [N_{Rd} in kN]	-2.28
Design resistance Pressure [N_{Rd} in kN]	2.28
Design resistance Shear force [V_{Rd} in kN]	2.87

Table 3
Design resistance for MSP-PR-RHA and MSP-PR-RHC

Design resistance Suction [N_{Rd} in kN]	-2.28
Design resistance Pressure [N_{Rd} in kN]	2.28
Design resistance Shear force [V_{Rd} in kN]	2.52

Table 4
Design resistance for MSP-PR-RHL under the action of compressive and shear tensile forces

Design resistance Suction [N_{Rd} in kN]	-1.36
Design resistance Pressure [N_{Rd} in kN]	1.36
Design resistance Shear force [V_{Rd} in kN]	1.67

© Ernst Schweizer AG

Ernst Schweizer AG
Bahnhofplatz 11
8908 Hedingen, Switzerland
Phone +41 44 763 61 11
www.ernstschweizer.ch
solar@ernstschweizer.ch

2.3 Roof hooks MSP-RHC

Table 5
Design resistance values without support

		MSP-RHC 45/5	MSP-RHC 55/5	MSP-RHC 41/8	MSP-RHC 55/8
Suction	[N_{Rd} in kN]	-0.60	-0.60	-1.49	-1.49
Pressure	[N_{Rd} in kN]	0.39	0.39	1.03	1.03
Shear force	[V_{Rd} in kN]	0.27	0.25	0.71	0.63

Pressure / shear force interaction
Linear interaction verification is required:

$$\frac{N_{Ed}}{N_{Rd}} + \frac{V_{Ed}}{V_{Rd}} \leq 1$$

Table 6
Design resistance values with support from an effectively supporting metal tile

		MSP-RHC 45/5	MSP-RHC 55/5	MSP-RHC 41/8	MSP-RHC 55/8
Suction	[N_{Rd} in kN]	-0.60	-0.60	-1.49	-1.49
Pressure	[N_{Rd} in kN]	0.59	0.59	1.55	1.55
Shear force	[V_{Rd} in kN]	0.80	0.80	1.99	1.99

Pressure / shear force interaction
Interaction verification is not required.

2.4 Support profile MSP-PR-CH

The design resistance values for the support profile MSP-PR-CH are considered separately for the cross-section (see 2.4.1) and the surface (see 2.4.2).

© Ernst Schweizer AG

Ernst Schweizer AG
Bahnhofplatz 11
8908 Hedingen, Switzerland
Phone +41 44 763 61 11
www.ernstschweizer.ch
solar@ernstschweizer.ch

2.4.1 Cross-section values

The cross-section values of the support profile MSP-PR-CH are shown in Table 7.

Table 7
Cross-section values for MSP-PR-CH

Profile	**Formula symbol**	**Unit**	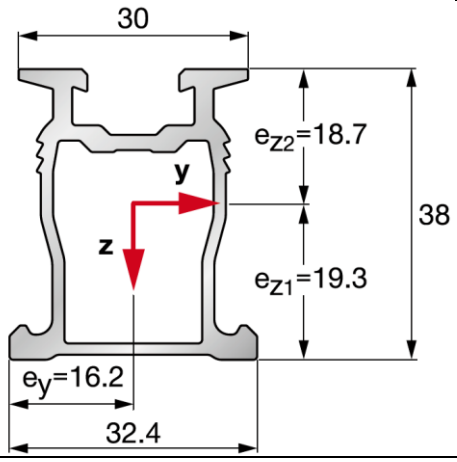
Material	-	-	EN AW-6063 T66 - EN 755-2
Stretch limit	Rp0.2	MPa	200
Module	E	MPa	70000
Weight per metre	g	kg/m	0.77
Wall thickness	d	mm	≤ 10
Cross-section surface	A	mm^2	286
Dimensions max	a_z	mm	38.0
Dimensions max	a_y	mm	32.4
Distance from centre of gravity	e_{z1}	mm	19.3
Distance from centre of gravity	e_{z2}	mm	18.7
Distance from centre of gravity	e_{y1}	mm	16.2
Distance from centre of gravity	e_{y2}	mm	16.2
Cross-section values y-axis			
Moment of inertia	I_y	cm^4	05:23
Resistance torque	W_{y1}	^{3}	2.79
Resistance torque	W_{y2}	cm^3	2.71
Cross-section values z-axis			
Moment of inertia	I_z	cm^4	2.81
Resistance torque	W_{z1}	cm^3	1.74
Resistance torque	W_{z2}	cm^3	1.74

© Ernst Schweizer AG

Ernst Schweizer AG
Bahnhofplatz 11
8908 Hedingen, Switzerland
Phone +41 44 763 61 11
www.ernstschweizer.ch
solar@ernstschweizer.ch

2.4.2 Surface resistance values

The design resistance of the top side of the MSP-PR-CH is listed inTable 8. The design resistance of the bottom side of the MSP-PR-CH is listed in Table 9.

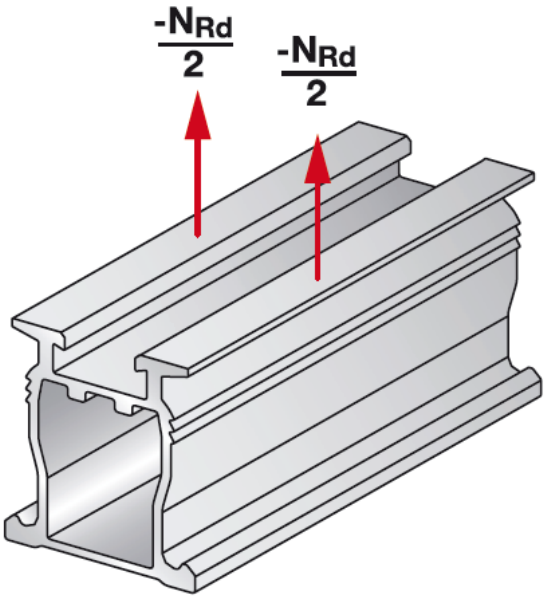

Fig. 2 Surface resistance vectors of the support profile MSP-PR-CH; interface to middle / end clamp or cross-connector

:

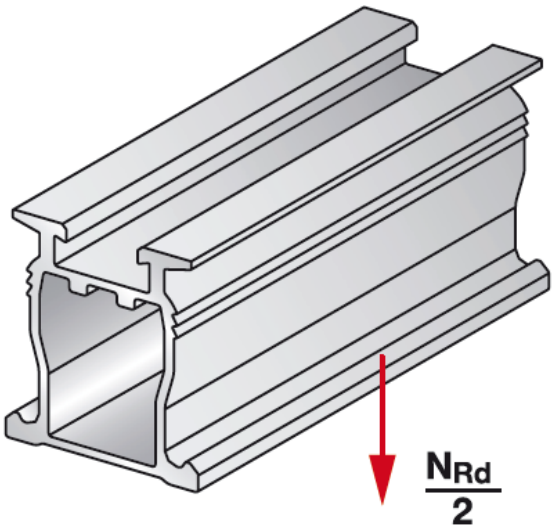

Fig. 3 Surface resistance vectors of the support profile MSP-PR-CH; interface to middle / end clamp or cross-connector

Table 8
Surface design resistance of the support profile MSP-PR-CH; interface to middle / end clamp or cross-connector

Design resistance tensile load [N_{Rd} in kN]	-4.35

Table 9
Surface resistance vectors of the support profile MSP-PR-CH; interface to middle / end clamp or cross-connector

Design resistance tensile load [N_{Rd} in kN]	5.88

© Ernst Schweizer AG

Ernst Schweizer AG
Bahnhofplatz 11
8908 Hedingen, Switzerland
Phone +41 44 763 61 11
www.ernstschweizer.ch
solar@ernstschweizer.ch

2.5 Cross-connector MSP-PR-CC

The design resistance values of type MSP-PR-CC cross connectors are listed in Table 10. The design resistance values for shear traction consist of the pre-tension design resistance of the screw plus the additional shear traction resistance from normal loading.

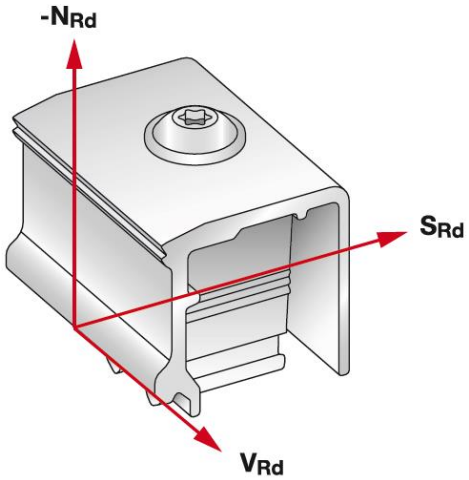

Fig. 4 Resistance vectors of the cross-connector MSP-PR-CC

Table 10
Design resistance values of the cross-connector MSP-PR-CC

Design resistance Suction [N_{Rd} in kN]	-1.59
Design resistance Shear force [V_{Rd} in kN]	0.42
Design resistance Shear force [S_{Rd} in kN]	0.93

2.6 Middle clamp MSP-PR-MC/G & MSP-PR-MCB/G

The design resistance values of the type MSP-PR-MC/G & MSP-PR-MCB/G middle clamp are listed inTable 11. The design resistance values for shear traction consist of the pre-tension design resistance of the screw plus the additional shear traction resistance from normal loading.

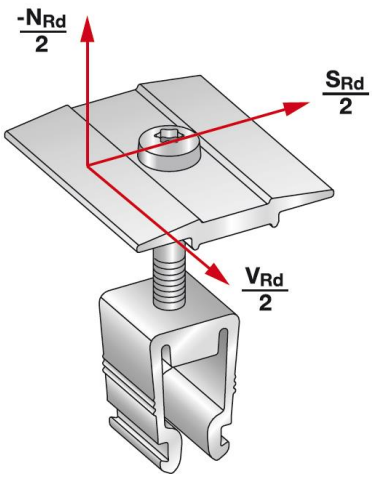

Fig. 5: Resistance vectors of the middle clamp MSP-PR-MC/G & MSP-PR-MCB/G

© Ernst Schweizer AG

Ernst Schweizer AG
Bahnhofplatz 11
8908 Hedingen, Switzerland
Phone +41 44 763 61 11
www.ernstschweizer.ch
solar@ernstschweizer.ch

Table 11
Resistance vectors of the middle clamp MSP-PR-MC/G & MSP-PR-MCB/G

Design resistance Suction [N_{Rd} in kN]	-5.17
Design resistance Shear force [V_{Rd} in kN]	1.29
Design resistance Shear force [S_{Rd} in kN]	1.29

2.7 End clamp MSP-PR-EC/B

The design resistance values of the type MSP-PR-EC/B end clamp are listed in Table 12. The design resistance values for shear traction consist of the pre-tension design resistance of the screw plus the additional shear traction resistance from normal loading.

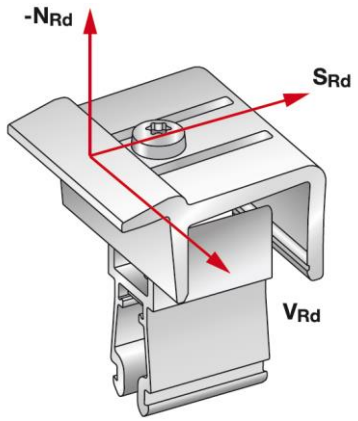

Fig. 6: Resistance vectors of the end clamp MSP-PR-EC/B

Table 12
Design resistance values of the end clamp MSP-PR-EC/B

Design resistance Suction [N_{Rd} in kN]	-1.9
Design resistance Shear force [V_{Rd} in kN]	0.51
Design resistance Shear force [S_{Rd} in kN]	0.51

© Ernst Schweizer AG

Ernst Schweizer AG
Bahnhofplatz 11
8908 Hedingen, Switzerland
Phone +41 44 763 61 11
www.ernstschweizer.ch
solar@ernstschweizer.ch

2.8 Hanger bolts Adapter plate MSP-PR-HBP (without hanger bolt)

The design resistance values of the adapter plate of the type MSP-PR-HBP are listed inTable 13.

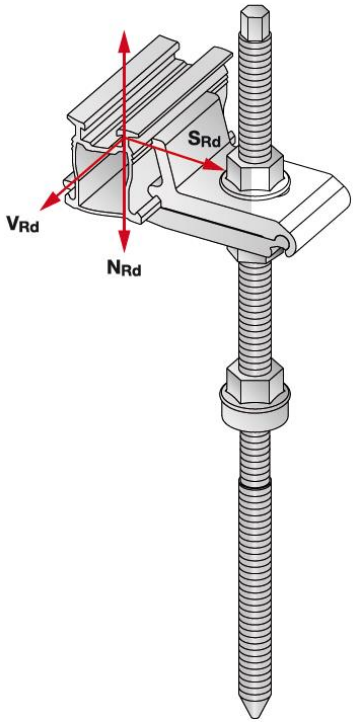

Fig. 7 Resistance vectors of the hanger bolt plate MSP-PR-HBP

Table 13
Resistance values of the hanger bolt adapter plate MSP-PR-HBP

Design resistance Suction [N_{Rd} in kN]	-3.00
Design resistance Pressure [N_{Rd} in kN]	2.93
Design resistance Shear force [V_{Rd} in kN]	±0.79
Design resistance Shear force [S_{Rd} in kN]	±2.17

3 Deflection of the roof hook MSP-RHF/RHA/RHC/RHL (limit state of serviceability)

When installed in accordance with the MSP-PR operating instructions, the minimum distance on the underside of the roof hook in load-free condition is at least 7 mm (see Fig. 8). The deflection of the roof hook MSP-PR-RHF/RHA/RHC/RHL can be up to 5 mm. This leaves a safety margin of 2 mm. The deflection of the base plate MSP-PR-BP has not been taken into account, nor has the deformation of the spacer plate MSP-PR-SP and the structural timber.
The actual values of deflection at the serviceability limit state for roof hooks of type MSP-PR-RHF/RHA/RHC/RHL are given in Table 14, Table 15 and Table 16. The deflection values are calculated according to the design resistance limit and divided by the overall safety factor of 1.4.

© Ernst Schweizer AG

Ernst Schweizer AG
Bahnhofplatz 11
8908 Hedingen, Switzerland
Phone +41 44 763 61 11
www.ernstschweizer.ch
solar@ernstschweizer.ch

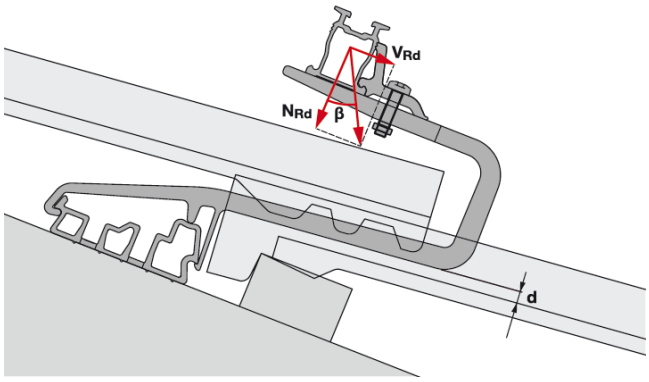

Fig. 8: Roof hooks MSP-PR-RHF/RHA/RHC/RHL in unloaded state

Table 14
Deflection (serviceability limit) for roof hooks MSP-PR-RHF under the action of compressive and shear forces

Resulting angle of action [β in °]	0	10	20	30	40	50	60	70	80	90
Deflection [d in mm]	3.3	3.3	3.3	3.3	3.2	3.2	3.2	3.0	2.6	2.2

Table 15
Deflection (serviceability limit) for roof hooks MSP-PR-RHA/RHC under the action of compressive and shear forces

Resulting Angle of action [β in °]	0	10	20	30	40	50	60	70	80	90
Deflection [d in mm]	3.3	3.4	3.4	3.4	3.4	3.4	3.5	3.5	3.6	3.6

Table 16
Deflection (serviceability limit) for roof hooks MSP-PRL under the action of compressive and shear forces

Resulting angle of action [β in °]	0	10	20	30	40	50	60	70	80	90
Deflection [d in mm]	3.3	3.5	3.5	3.5	3.5	3.3	3.1	2.9	2.5	2.2

© Ernst Schweizer AG

Ernst Schweizer AG
Bahnhofplatz 11
8908 Hedingen, Switzerland
Phone +41 44 763 61 11
www.ernstschweizer.ch
solar@ernstschweizer.ch